F. H. W. A. REGION NO.	STATE	TOWN	FED. AID PROJ. NO.	PROJ. NO.	YEAR	ROUTE NO.	SHEET NO.	TOTAL SHEETS
1	CONN.	ESSEX			2013		1	12

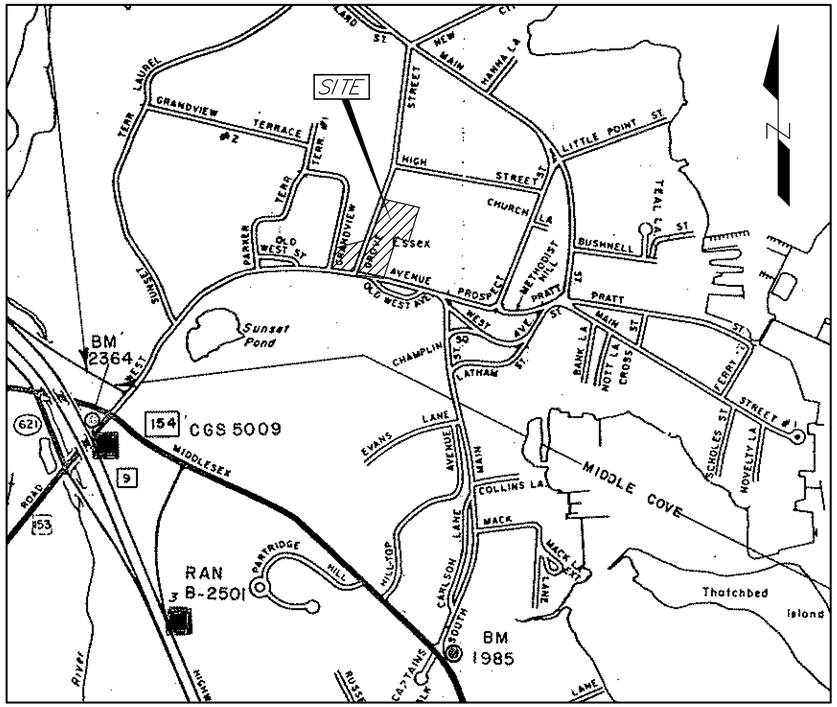

TOWN OF ESSEX DESIGN PLANS FOR CIVIC CAMPUS ENHANCEMENT

ESSEX, CONNECTICUT

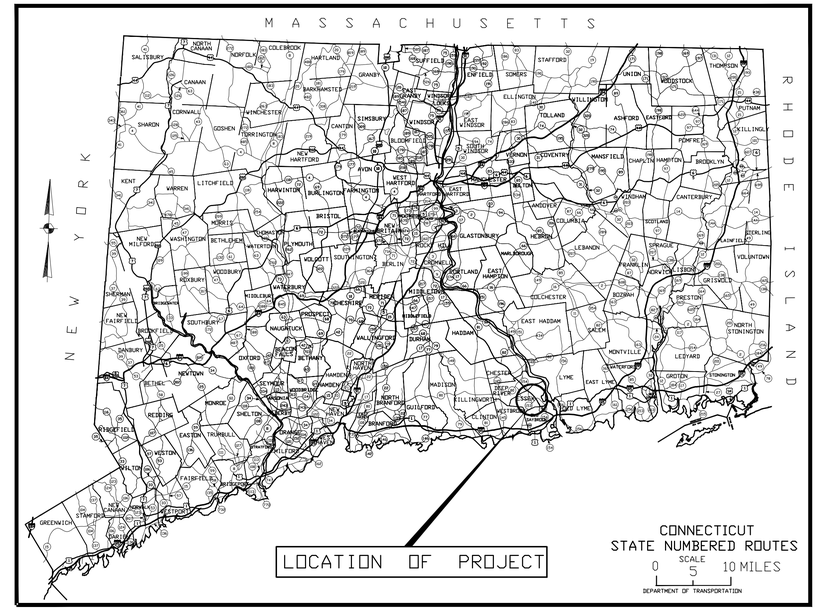

2004 SPECIFICATIONS, FORM 816 INCLUDING SUPPLEMENTAL SPECIFICATION DATED JULY 2013 GOVERN.
ALL ELEVATIONS ON THIS PROJECT ARE BASED ON N. G. V. D. 1929.
STATE PLANE COORDINATES BASED ON N. A. D. 1988.

LOCATION PLAN

SCALE 1"=500'

TO BE MAINTAINED BY THE TOWN OF ESSEX

LIST OF DRAWINGS

1 COVER SHEET
2 EXISTING CONDITIONS PLAN
3 DEMOLITION PLAN
4 LAYOUT PLAN
5 ROADWAY PROFILE AND GRADING PLAN
6 GRADING AND UTILITIES PLAN
7 LANDSCAPE PLAN
8 SITE DETAILS
9 SITE AND LANDSCAPE DETAILS
10 UTILITIES DETAILS
11 PLAYSCAPE DETAILS
12 TENNIS COURT DETAILS

SCALES AS NOTED

DECD

Lenard Engineering, Inc.

DESIGNED BY: LENARD ENGINEERING, INC.

SUBMITTED BY: _____

FIRST SELECTMAN
TOWN OF ESSEX

_____
NORMAN M. NEEDLEMAN

SUBMITTED: JUNE 28, 2013

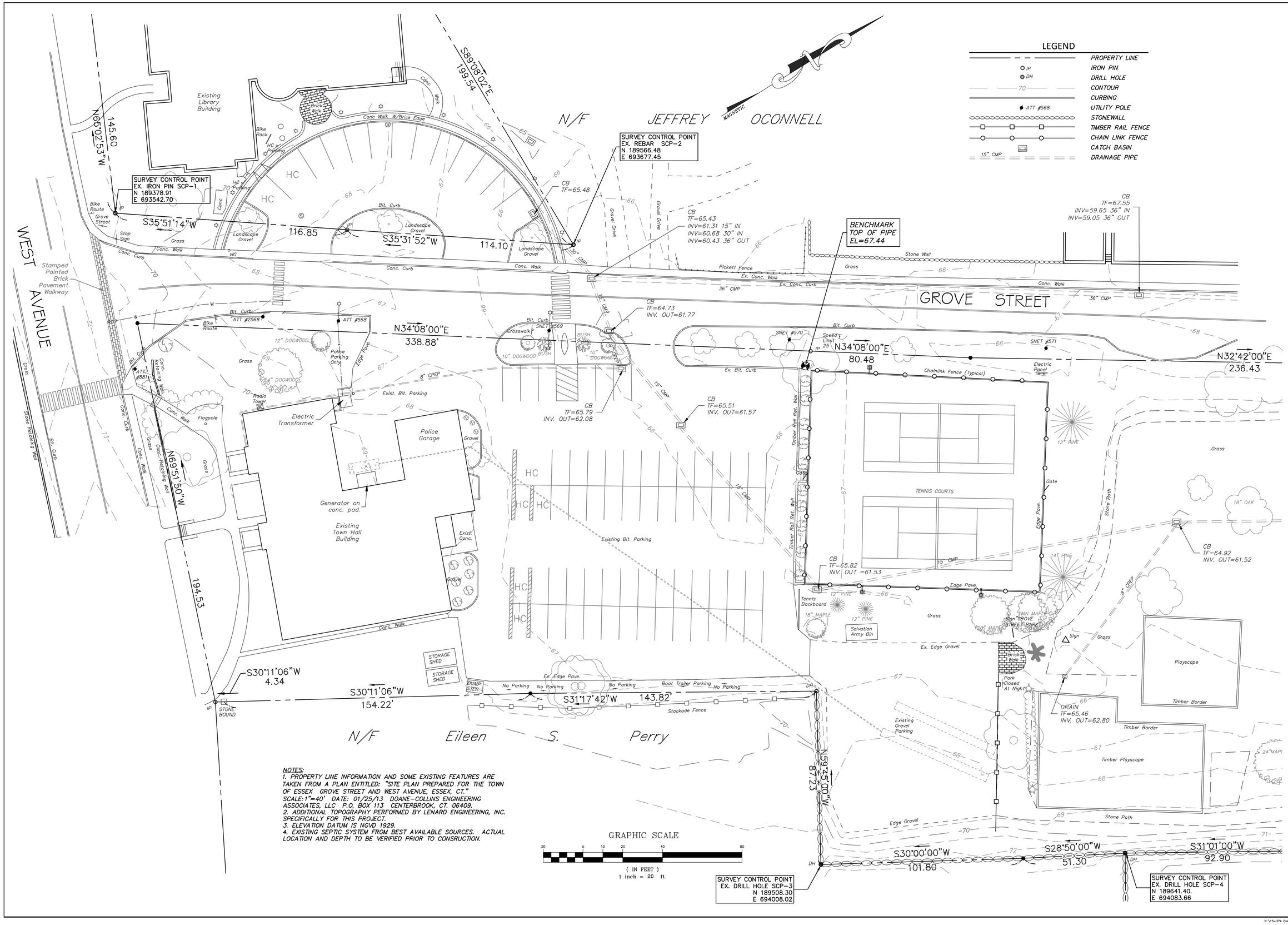

NOTES:
1. PROPERTY LINE INFORMATION AND SOME EXISTING FEATURES ARE TAKEN FROM A PLAN ENTITLED: "SITE PLAN PREPARED FOR THE TOWN OF ESSEX GROVE STREET AND WEST AVENUE, ESSEX, CT." SCALE:1"=40' DATE: 01/25/13 DOANE-COLLINS ENGINEERING ASSOCIATES, LLC P.O. BOX 113 CENTERBROOK, CT. 06409.
2. ADDITIONAL TOPOGRAPHY PERFORMED BY LENARD ENGINEERING, INC. SPECIFICALLY FOR THIS PROJECT.
3. ELEVATION DATUM IS NGVD 1929.
4. EXISTING SEPTIC SYSTEM FROM BEST AVAILABLE SOURCES. ACTUAL LOCATION AND DEPTH TO BE VERIFIED PRIOR TO CONSRUCTION.

Designed By: PM
Drawn By: KLD
Checked By: PM
CAD File: Design Plan

Drawing Scale: 1"=20'
Drawing date: JUNE 28, 2013

Rev.	Date	Revision	By

EXISTING CONDITIONS PLAN

PREPARED FOR

CIVIC CAMPUS ENHANCEMENT
TOWN OF ESSEX
ESSEX, CONNECTICUT

Lenard Engineering, Inc.
Civil, Environmental and Hydrogeological Consultants
2230 Main Street GLASTONBURY, CT (860) 659-3100
140 Willow Street WINSTED, CT (860) 379-6669
19 Midstate Drive AUBURN, MA (508) 721-7600

Drawing #: 2 of 12

Job #: 13-374

K:\13-374 Essex\Production Drawings\Design Plan.dwg 7/1/2013 9:40 AM

LEGEND

PAVEMENT CUT LINE

PAVEMENT TO BE REMOVED

PAVEMENT TO BE MILLED

ELIMINATE EXISTING STRIPING (TYP.)

MILL EXIST. PAVEMENT 1.5" DEEP (TYP.)

MAGNETIC

Existing Library Building

REMOVE H.C. PARKING SIGN TURN OVER TO TOWN.

CUT EXIST. CONC. WALK AND CURB

REMOVE SIGNS. SAVE FOR RE-INSTALLATION

REMOVE EXIST. BIT. CURB

SAWCUT EX. BIT. PAVEMENT FULL-DEPTH (TYP.)

REMOVE EXIST. BIT. CURB

REMOVE EX. CONCRETE WALK AND CURB. (TYP.)

REMOVE EXIST. CONC. WALK AND CURB

SAW-CUT EXIST. BIT. PAVEMENT FULL- DEPTH (TYP.)

LIMIT OF MILLING BIT. PAVEMENT

Stamped Painted Brick Pavement Walkway

WEST AVENUE

GROVE STREET

BENCHMARK TOP OF PIPE EL=67.44

CUT EXIST. CONC. WALK AND CURB

SAWCUT EX. BIT PAVEMENT

REMOVE EXIST. TREES & BUSHES

REMOVE "CROSSWALK SIGN. SAVE FOR RE-INSTALLATION

REMOVE EXIST. CATCH BASIN

REMOVE EX. BIT. CURBING

REMOVE TREE

REMOVE "BIKE ROUTE" SIGN & POLICE PARKING SIGN. SAVE FOR RE-INSTALLATION

REMOVE EX. BIT. CURBING

REMOVE EXIST. PAVEMENT

REMOVE EXIST. CONC. WALK

REMOVE EXIST. BIT. CURBS

REMOVE EXIST. TREES

REMOVE EX. BIT. CURBING

CUT EXIST. CONC. WALK

REMOVE EX. CONC. WALK

SAWCUT EX. BIT. PAVEMENT

REMOVE CB TOP. SAVE FOR RE-INSTALLATION.

REMOVE EXIST. TIMBER RETAINING WALL AND STEPS.

REMOVE SHRUBS (TYP.)

REMOVE EXIST. TENNIS COURT PAVEMENT

REMOVE FENCE TEMPORARILY FOR CONSTRUCTION ENTRANCE.

REMOVE EXIST. PLANTING BEDS, SHRUBS & BIT. CURBS (TYP.)

REMOVE EXIST. PAVEMENT (TYP.)

REMOVE CATCH BASIN.

REMOVE FENCE FOR PROPOSED PEDESTRIAN ENTRANCE

REMOVE EXIST. CATCH BASIN TOP. SAVE FOR RE-INSTALLATION.

EXISTING PLAYSCAPES & TIMBER BORDERS (TYP.) TO BE REMOVED BY TOWN FORCES.

REMOVE SIGN. SAVE FOR RE-INSTALLATION

REMOVE EXIST. TREES

RELOCATE DUMPSTER TO TOWN-DESIGNATED LOCATION. RE-INSTALL ON NEW DUMPSTER PAD UPON PROJECT COMPLETION.

REMOVE SIGNS. SAVE FOR RE-INSTALLATION.

REMOVE SALVATION ARMY DROP-BIN AND TENNIS BACKBOARD. STORE AT TOWN-DESIGNATED LOCATION FOR REINSTALLATION.

GRAPHIC SCALE

(IN FEET)
1 inch = 20 ft.

Designed By: PM
Drawn By: KLD
Checked By: PM
CAD File: Design Plan

Drawing Scale: 1"=20'

Drawing date: JUNE 28, 2013

Rev.	Date	Revision	By

DEMOLITION PLAN

PREPARED FOR

CIVIC CAMPUS ENHANCEMENT

TOWN OF ESSEX
ESSEX, CONNECTICUT

Lenard Engineering, Inc.
Civil, Environmental and Hydrogeological Consultants

2310 Main Street
GLASTONBURY, CT
(860) 659-3100

140 Willow Street
WINSTED, CT
(860) 379-6669

19 Millstate Drive
AUBURN, MA
(508) 721-7600

Drawing #:
3 of 12

Job #: 13-374

K:\13-374 Essex\Production Drawings\Design Plan.dwg 7/1/2013 9:41 AM

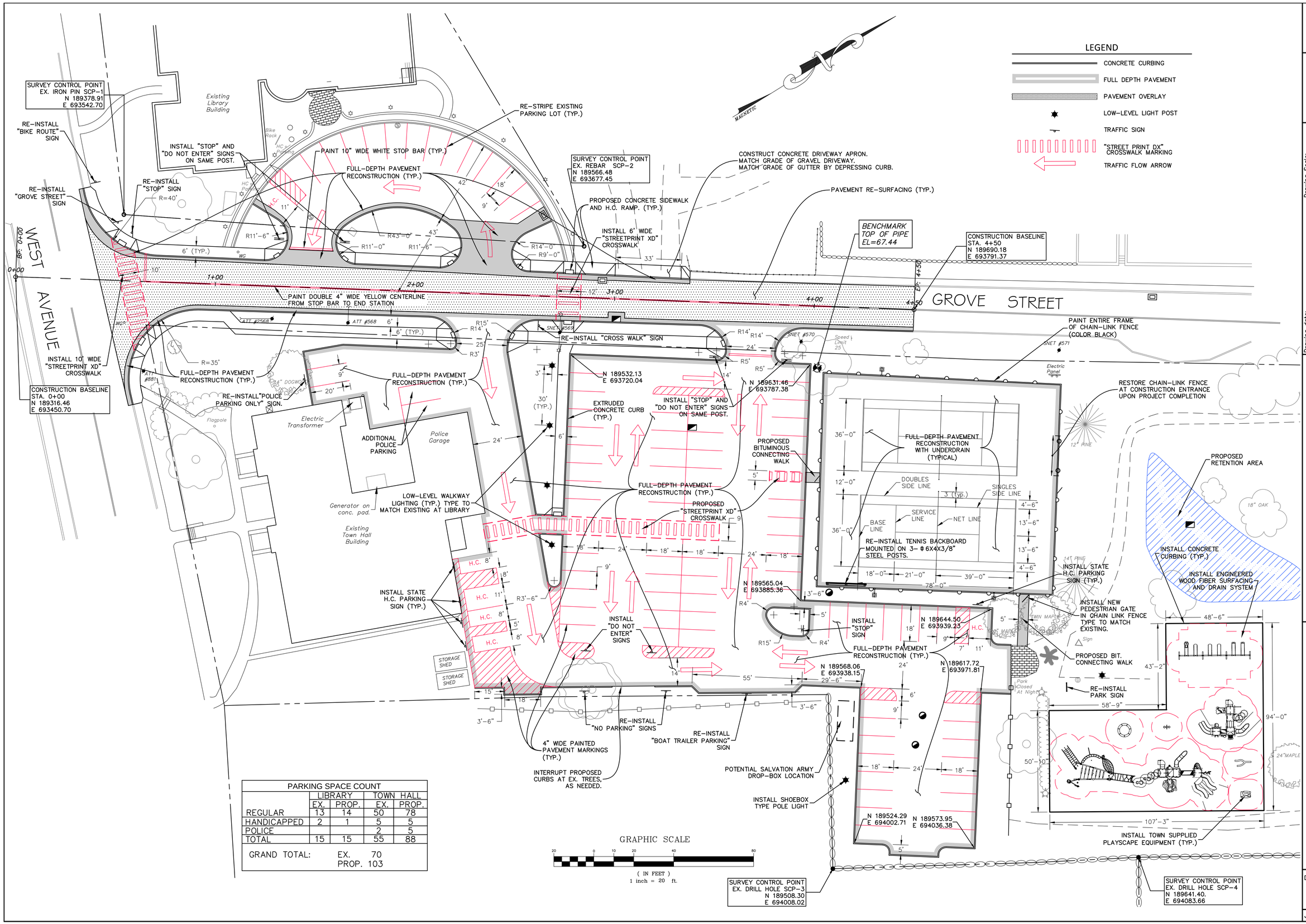

PARKING SPACE COUNT				
	LIBRARY		TOWN HALL	
	EX.	PROP.	EX.	PROP.
REGULAR	13	14	50	78
HANDICAPPED	2	1	5	5
POLICE			2	5
TOTAL	15	15	55	88
GRAND TOTAL:	EX. 70 PROP. 103			

Designed By: PM
Drawn By: KLD
Checked By: PM
CAD File: Design Plan

Drawing Scale: 1"=20'
Drawing date: JUNE 28, 2013

Rev.	Date	Revision	By

LAYOUT PLAN

PREPARED FOR

CIVIC CAMPUS ENHANCEMENT

TOWN OF ESSEX
ESSEX, CONNECTICUT

Lenard Engineering, Inc.
Civil, Environmental and Hydrogeological Consultants
2210 Main Street GLASTONBURY, CT (860) 659-3100
140 Willow Street WINSTED, CT (860) 379-6669
19 Midstate Drive AUBURN, MA (508) 721-7600

Drawing #: 4 of 12

Job #: 13-374

K:\13-374 Essex\Production Drawings\Design Plan.dwg 7/1/2013 9:41 AM

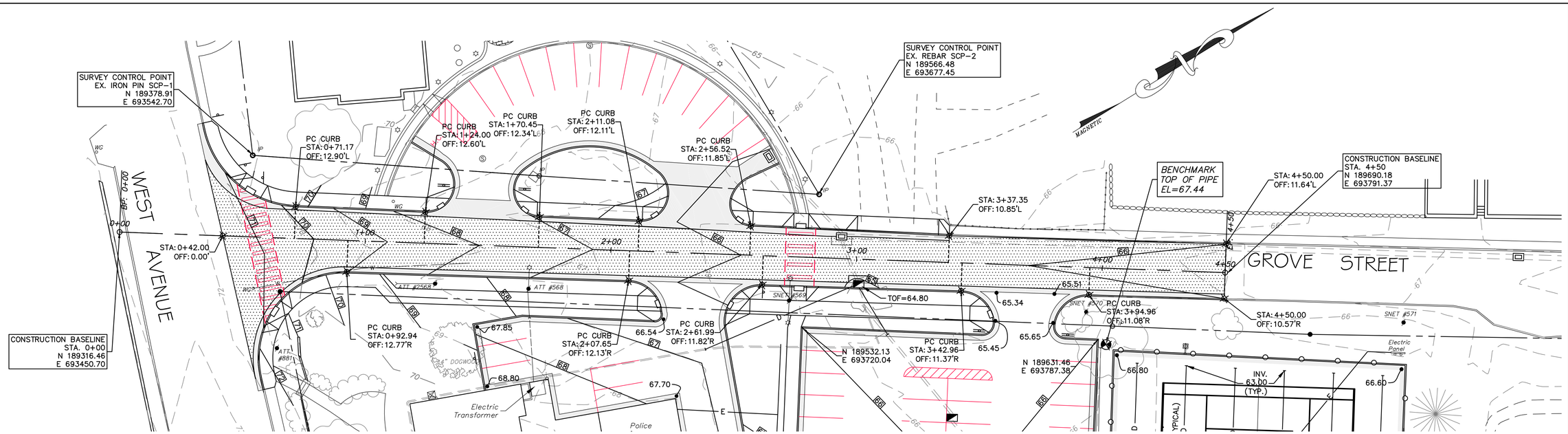

GRAPHIC SCALE

20 0 10 20 40 80

(IN FEET)
1 inch = 20 ft.

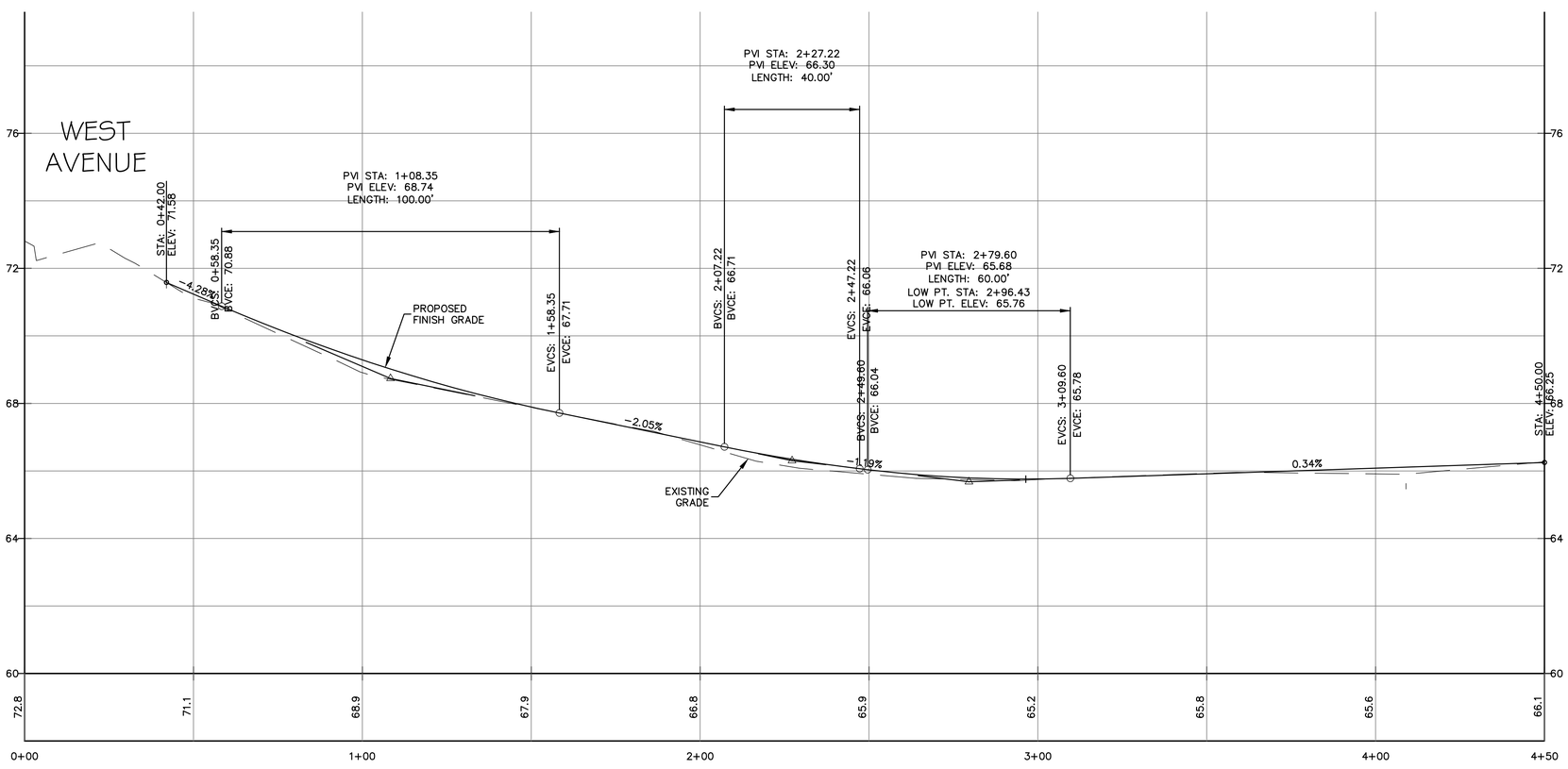

SCALE: 1"=20' HORIZ
1"=2' VERT

Designed By: PM
Drawn By: KLD
Checked By: PM
CAD File: DesignPlan

Drawing Scale: 1"=20'

Rev.	Date	Revision	By

Drawing date: JUNE 28, 2013

ROADWAY PROFILE & GRADING PLAN

PREPARED FOR

CIVIC CAMPUS ENHANCEMENT

TOWN OF ESSEX
ESSEX, CONNECTICUT

Lenard Engineering, Inc.
Civil, Environmental and Hydrogeological Consultants
2210 Main Street
GLASTONBURY, CT
(860) 659-3100
140 Willow Street
WINSTED, CT
(860) 379-9689
19 Midstate Drive
AUBURN, MA
(508) 721-7600

Drawing #:
5 of 12

Job #: 13-374

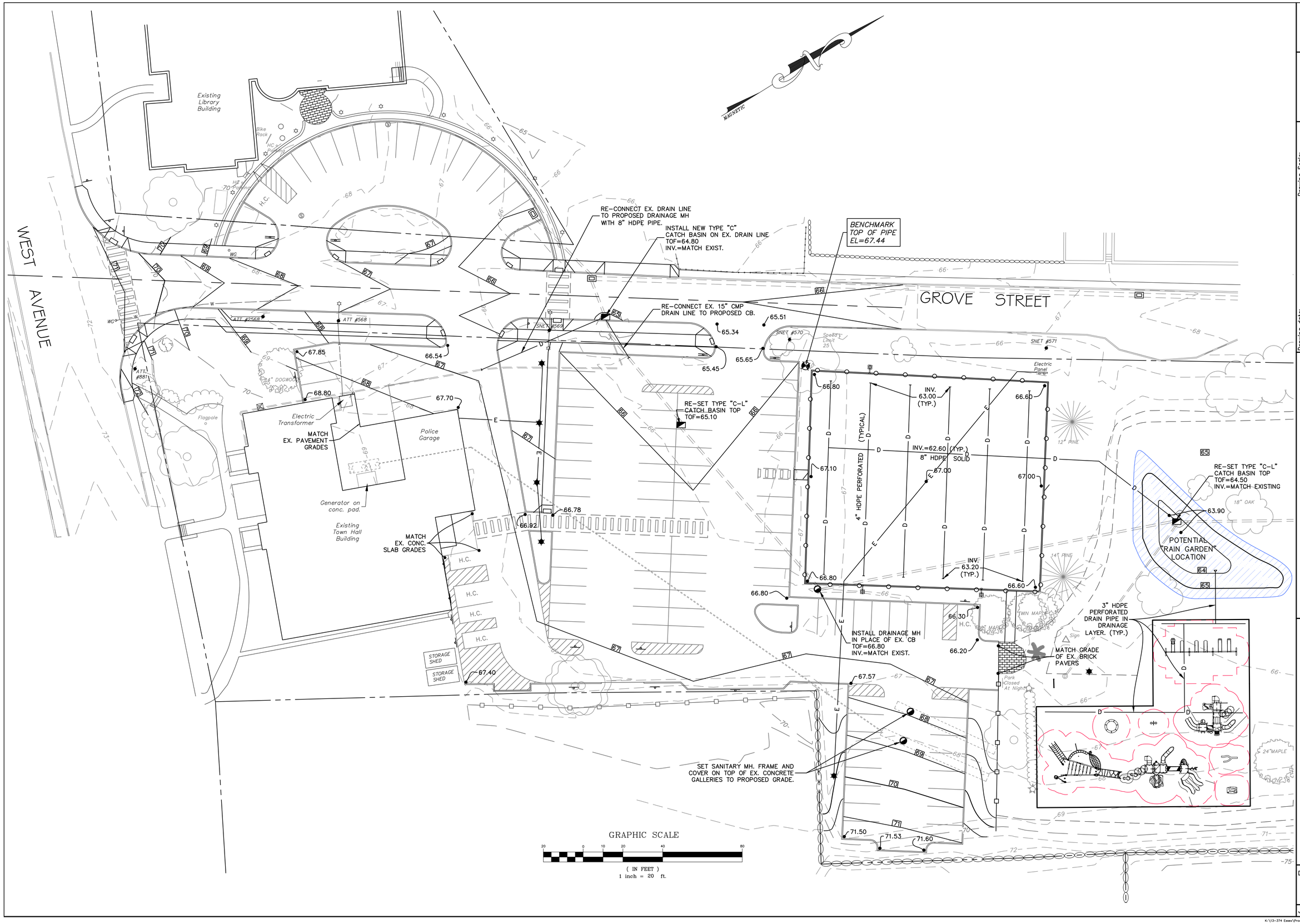

Designed By: PM
Drawn By: KLD
Checked By: PM
CAD File: Design Plan

Drawing Scale: 1"=20'

Drawing date: JUNE 28, 2013

Rev.	Date	Revision	By

GRADING & UTILITIES PLAN

PREPARED FOR

CIVIC CAMPUS ENHANCEMENT

TOWN OF ESSEX
ESSEX, CONNECTICUT

Lenard Engineering, Inc.
Civil, Environmental and Hydrogeological Consultants
2210 Main Street, GLASTONBURY, CT (860) 659-3100
140 Willow Street, WINSTED, CT (860) 379-6669
19 Midstate Drive, AUBURN, MA (508) 721-7600

Drawing #: 6 of 12

Job #: 13-374

K:\13-374 Essex\Production Drawings\Design Plan.dwg 7/1/2013 9:43 AM

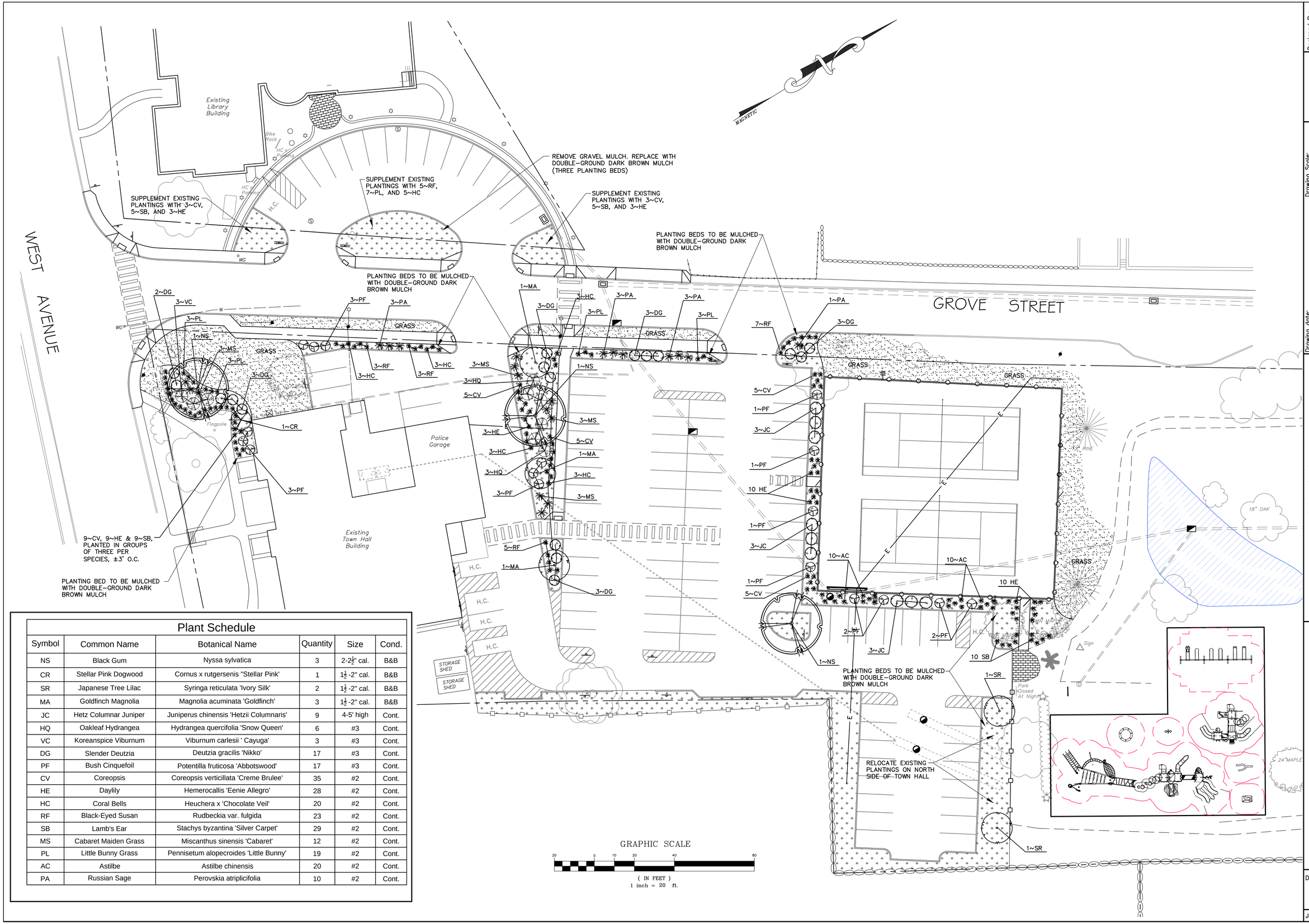

Plant Schedule

Symbol	Common Name	Botanical Name	Quantity	Size	Cond.
NS	Black Gum	Nyssa sylvatica	3	2-2½" cal.	B&B
CR	Stellar Pink Dogwood	Cornus x rutgersenis "Stellar Pink'	1	1½ -2" cal.	B&B
SR	Japanese Tree Lilac	Syringa reticulata 'Ivory Silk'	2	1½ -2" cal.	B&B
MA	Goldfinch Magnolia	Magnolia acuminata 'Goldfinch'	3	1½ -2" cal.	B&B
JC	Hetz Columnar Juniper	Juniperus chinensis 'Hetzii Columnaris'	9	4-5' high	Cont.
HQ	Oakleaf Hydrangea	Hydrangea quercifolia 'Snow Queen'	6	#3	Cont.
VC	Koreanspice Viburnum	Viburnum carlesii ' Cayuga'	3	#3	Cont.
DG	Slender Deutzia	Deutzia gracilis 'Nikko'	17	#3	Cont.
PF	Bush Cinquefoil	Potentilla fruticosa 'Abbotswood'	17	#3	Cont.
CV	Coreopsis	Coreopsis verticillata 'Creme Brulee'	35	#2	Cont.
HE	Daylily	Hemerocallis 'Eenie Allegro'	28	#2	Cont.
HC	Coral Bells	Heuchera x 'Chocolate Veil'	20	#2	Cont.
RF	Black-Eyed Susan	Rudbeckia var. fulgida	23	#2	Cont.
SB	Lamb's Ear	Stachys byzantina 'Silver Carpet'	29	#2	Cont.
MS	Cabaret Maiden Grass	Miscanthus sinensis 'Cabaret'	12	#2	Cont.
PL	Little Bunny Grass	Pennisetum alopecroides 'Little Bunny'	19	#2	Cont.
AC	Astilbe	Astilbe chinensis	20	#2	Cont.
PA	Russian Sage	Perovskia atriplicifolia	10	#2	Cont.

Designed By: PM
Drawn By: KLD
Checked By: PM
CAD File: Design Plan

Drawing date: JUNE 28, 2013
Drawing Scale: 1"=20'

Rev.	Date	Revision	By

LANDSCAPING PLAN

PREPARED FOR

CIVIC CAMPUS ENHANCEMENT

TOWN OF ESSEX
ESSEX, CONNECTICUT

Lenard Engineering, Inc.
Civil, Environmental and Hydrogeological Consultants
2210 Main Street, GLASTONBURY, CT (860) 659-3100
140 Willow Street, WINSTED, CT (860) 379-6669
19 Millstate Drive, AUBURN, MA (508) 721-7600

Drawing #: 7 of 12

Job #: 13-374

K:\13-374 Essex\Production Drawings\Design Plan.dwg 7/1/2013 9:43 AM

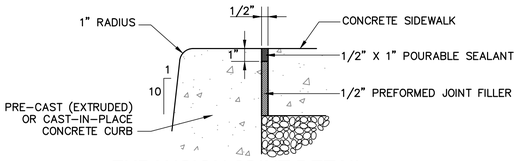

EXPANSION JOINT DETAIL AT CONCRETE CURB

N.T.S.

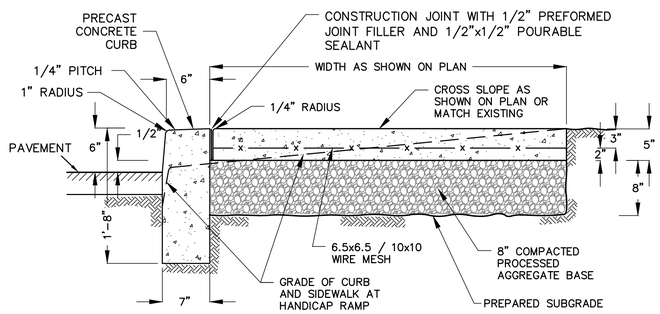

TYPICAL CONCRETE SIDEWALK SECTION WITH PRE-CAST CONCRETE CURB

NOT TO SCALE

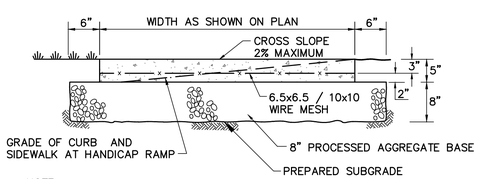

NOTE:
1. JOINT SPACING IS TYPICALLY EQUAL TO THE WIDTH OF THE CONCRETE WALK, UNLESS OTHERWISE SHOWN ON THE PLAN.

TYPICAL CONCRETE SIDEWALK SECTION

N.T.S.

HANDICAPPED PARKING SIGN

NOT TO SCALE

SIGN DETAILS

NOT TO SCALE

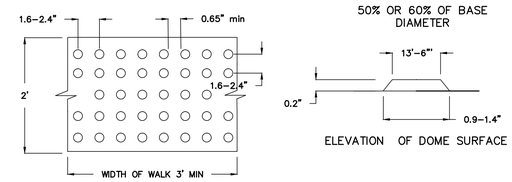

PLAN

NOTE:
1. DETECTABLE WARNING SURFACE COLOR TO CONTRAST WITH ADJACENT HARD SURFACE
2. BY ADVANCE TRAFFIC MARKINGS, 413-239-3792 www.trafficmarking.com INSTALL PER MANUFACTURER'S RECOMMENDATIONS

DETECTABLE WARNING MAT

NOT TO SCALE

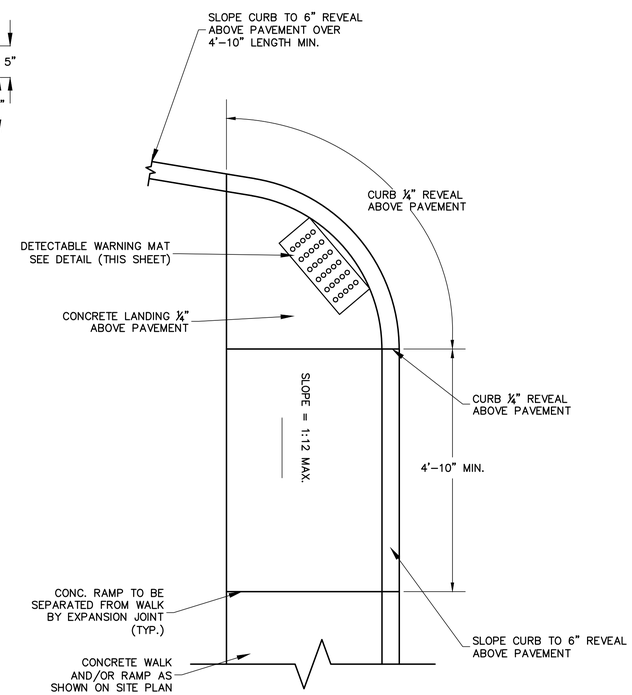

PLAN

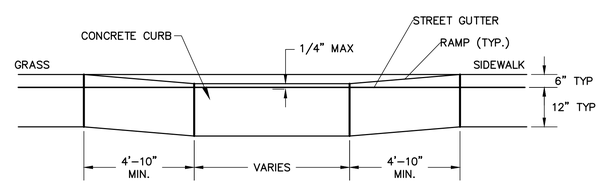

PROFILE

HANDICAPPED RAMP DETAIL

NOT TO SCALE

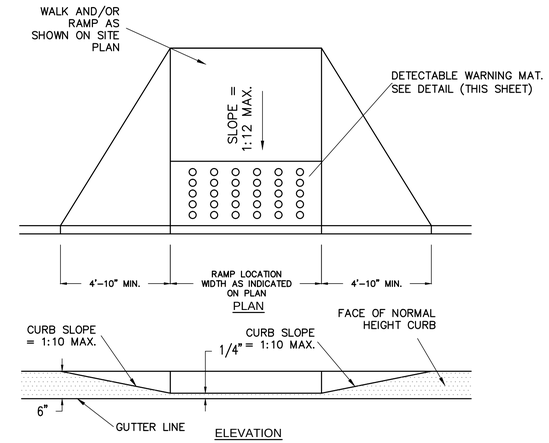

CURB PROFILE AT RAMP

NOT TO SCALE

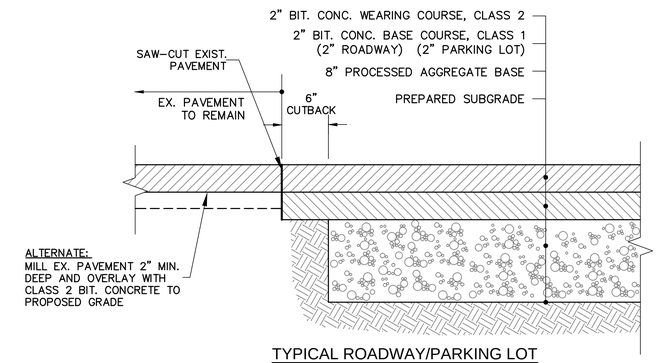

TYPICAL ROADWAY/PARKING LOT PAVEMENT DETAIL

NOT TO SCALE

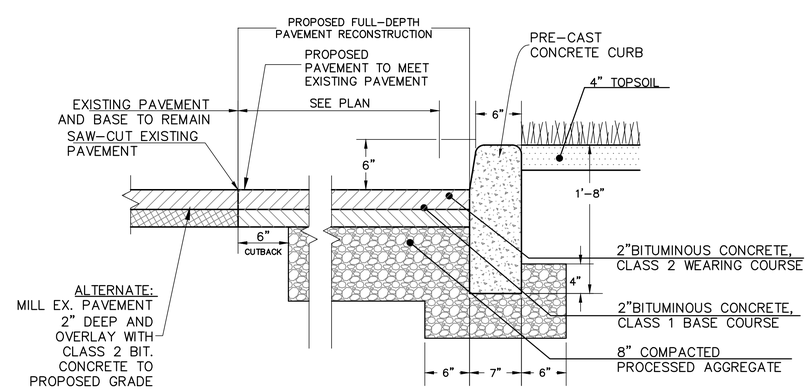

BITUMINOUS PAVEMENT AND PRE-CAST CONCRETE CURBING DETAIL

N.T.S.

Designed By: PM
Drawn By: KLD
Checked By: PM
CAD File: SITE DETAILS

Drawing Scale: AS NOTED

Drawing date: JUNE 28, 2013

Rev.	Date	Revision	By

SITE DETAILS

PREPARED FOR

CIVIC CAMPUS ENHANCEMENT
TOWN OF ESSEX
ESSEX, CONNECTICUT

Lenard Engineering, Inc.
Civil, Environmental and Hydrogeological Consultants
2210 Main Street GLASTONBURY, CT (860) 659-3100
140 Willow Street WINSTED, CT (860) 379-6609
19 Midstate Drive AUBURN, MA (508) 721-7600

Drawing #: 8 of 12

Job #: 13-374

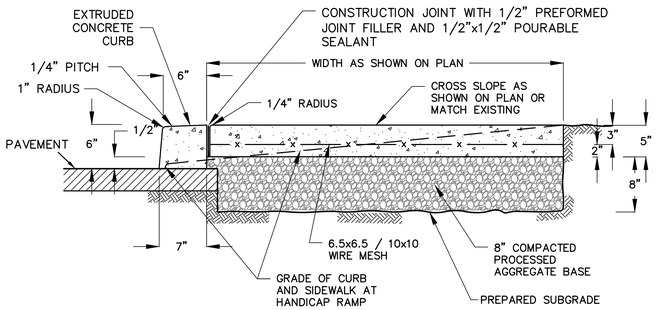

TYPICAL CONCRETE SIDEWALK SECTION WITH EXTRUDED CONCRETE CURB

NOT TO SCALE

GENERAL NOTES:

1. POSTS SHALL BE TYPE "B" AND OF STEEL MATERIAL CONFORMING TO ASTM A499, GRADE 60.

2. POSTS AND ACCESSORIES (STRAPS AND PLATES SHALL BE GALVANIZED AFTER FABRICATION TO MEET THE REQUIREMENTS OF ASTM A123.

3. BOLTS, NUTS AND WASHERS SHALL BE GALVANIZED TO MEET THE REQUIREMENTS OF ASTM A153.

4. THE LENGTH OF THE POST SHALL ALLOW FOR 3.5 FEET EMBEDMENT AND 7 FEET HEIGHT FROM THE GRADE TO THE TOP OF THE SIGN.

TYPICAL METAL SIGN POSTS

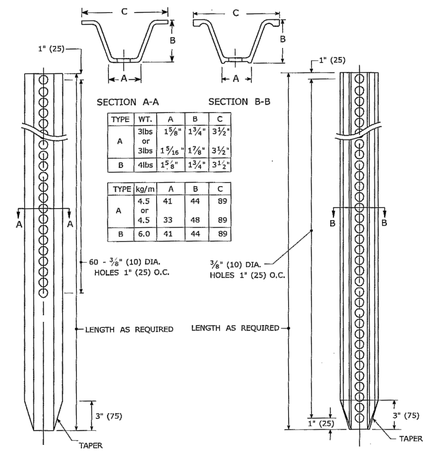

TYPE	WT.	A	B	C
A	3lbs or 3lbs	1 5/8"	1 3/4"	3 1/2"
B	4lbs	1 5/16"	1 7/8"	3 1/2"
		1 3/8"	1 3/4"	3 1/2"

TYPE	kg/m	A	B	C
A	4.5 or 4.5	41	44	89
		33	48	89
B	6.0	41	44	89

TYPICAL SIGN PANEL ATTACHMENT

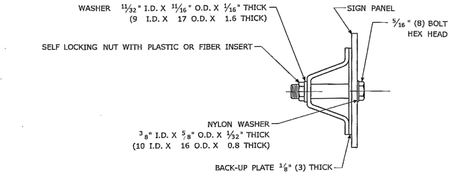

TYPICAL BACK TO BACK SIGN PANEL ATTACHMENT

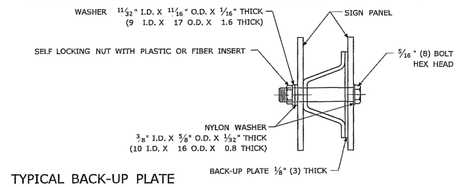

TYPICAL BACK-UP PLATE

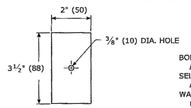

BOLTS - STAINLESS STEEL CONFORMING TO ASTM F593, ALLOY GROUP 1 OR 2 (ALLOY TYPES 304 OR 316).
SELF LOCKING NUTS - STAINLESS STEEL CONFORMING TO ASTM F594, ALLOY GROUP 1 OR 2 (ALLOY TYPES 304 OR 316).
WASHERS - STAINLESS STEEL CONFORMING TO ASTM A240, (ALLOY TYPES 304 OR 316).

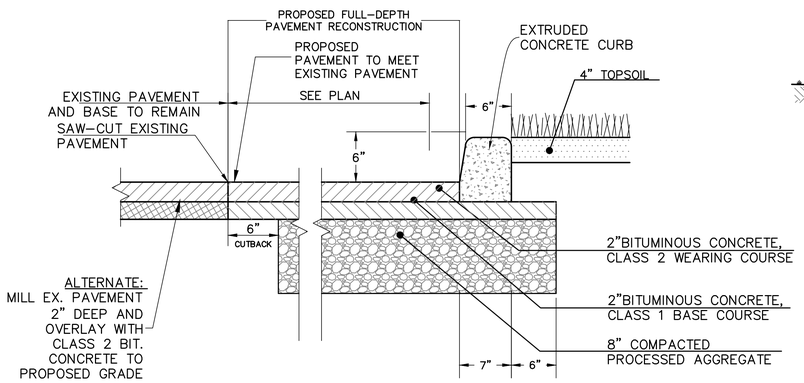

BITUMINOUS PAVEMENT AND EXTRUDED CONCRETE CURBING DETAIL

N.T.S.

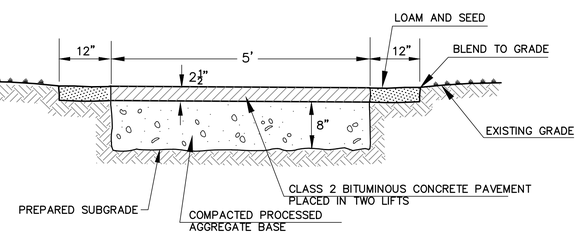

BITUMINOUS CONCRETE WALK NOT TO SCALE

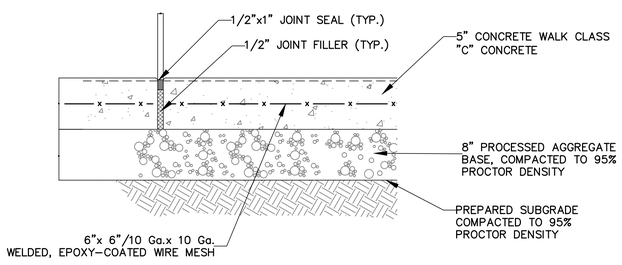

CONCRETE WALK WITH TRANSVERSE EXPANSION JOINT

NOT TO SCALE

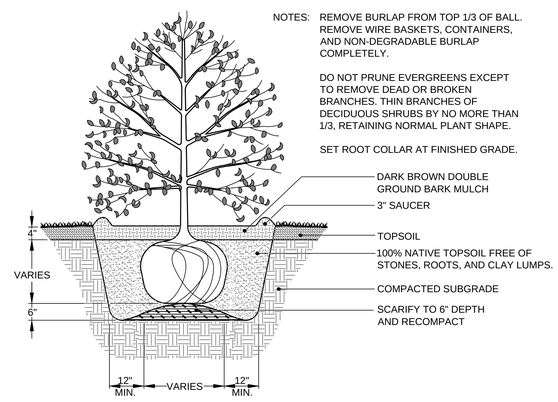

SHRUB PLANTING DETAIL

NOT TO SCALE

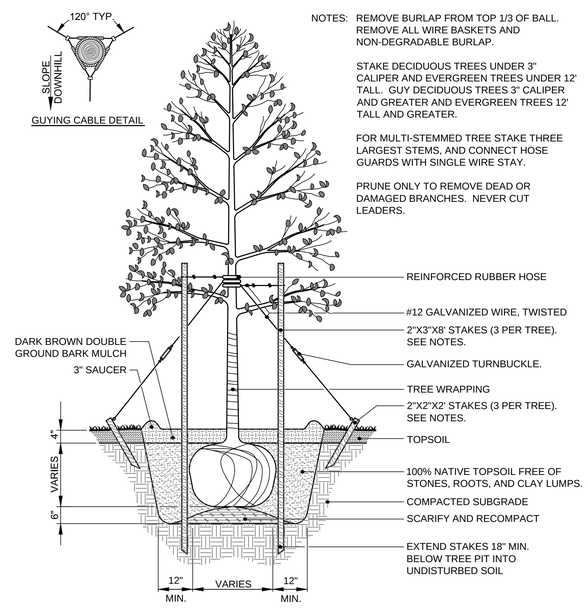

TREE PLANTING DETAIL

NOT TO SCALE

Designed By: PM
Drawn By: KLD
Checked By: PM
CAD File: SITE DETAILS

Drawing Scale: AS NOTED

Drawing date: JUNE 28, 2013

Rev.	Date	Revision	By

SITE AND LANDSCAPE DETAILS

PREPARED FOR
CIVIC CAMPUS ENHANCEMENT
TOWN OF ESSEX
ESSEX, CONNECTICUT

Lenard Engineering, Inc.
Civil, Environmental and Hydrogeological Consultants
19 Midstate Drive AUBURN, MA (508) 721-7600
140 Willow Street WINSTED, CT (860) 379-8669
2210 Main Street GLASTONBURY, CT (860) 659-3100

Drawing #: 9 of 12

Job #: 13-374

NOTES:

WHERE PRECAST CONCRETE UNIT IS USED FOR THE SUMP, THE TOP FOR THE UNIT SHALL BE AT LEAST 6" BELOW THE BOTTOM OF THE PIPE OUTLETTING FROM THE CATCH BASIN

FOR DETAILS OF FRAMES AND GRATES, SEE CONN. DOT STANDARD SHEET 507-K.

THE WALLS OF ALL CATCH BASINS OVER 10 FT. DEEP TO BE INCREASED TO 12" THICKNESS, WHILE INSIDE DIMENSIONS TO REMAIN THE SAME.

CATCH BASIN HOODS SHALL BE PLACED ON THE OUTLET PIPE OF EACH CATCH BASIN. CONTRACTOR SHALL SUBMIT SHOP DRAWING OF PROPOSED HOOD FOR APPROVAL

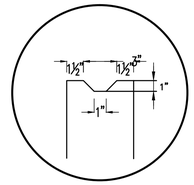

DETAIL "A"

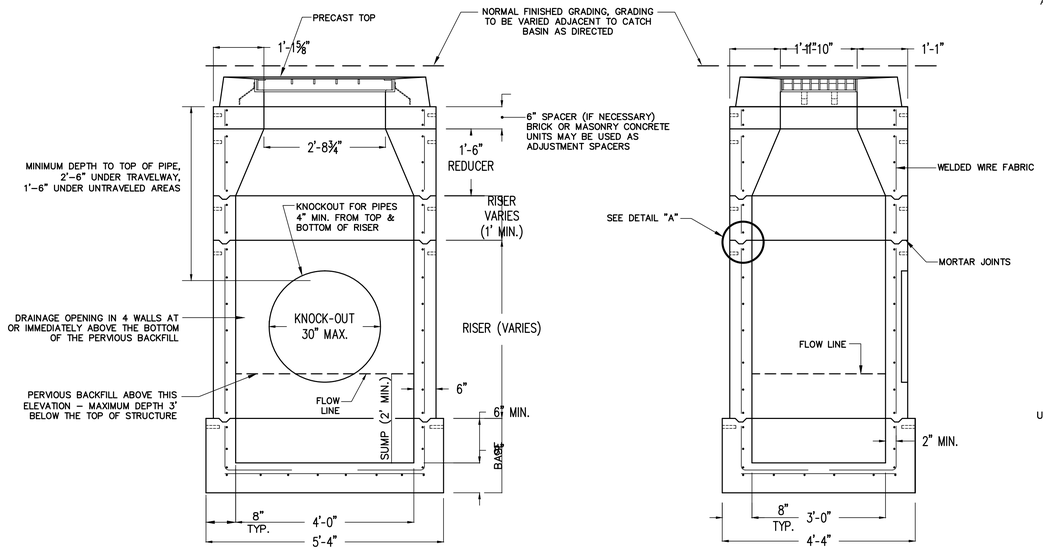

SECTION A-A

SECTION B-B

PRECAST TYPE 'C-L" CATCH BASIN
NOT TO SCALE

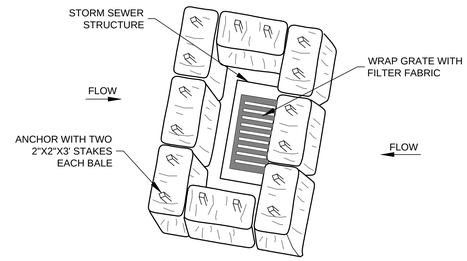

CATCH BASIN PROTECTION USING HAYBALES AND FILTER FABRIC
NOT TO SCALE

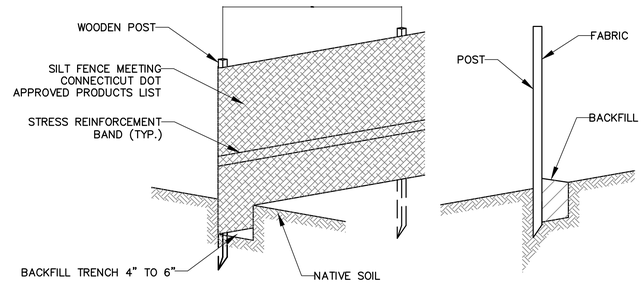

SILT FENCING DETAIL
NOT TO SCALE

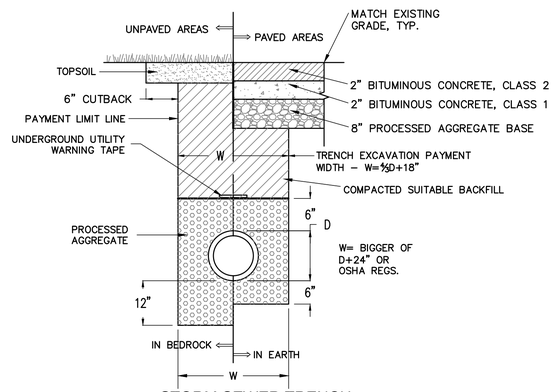

STORM SEWER TRENCH
NOT TO SCALE

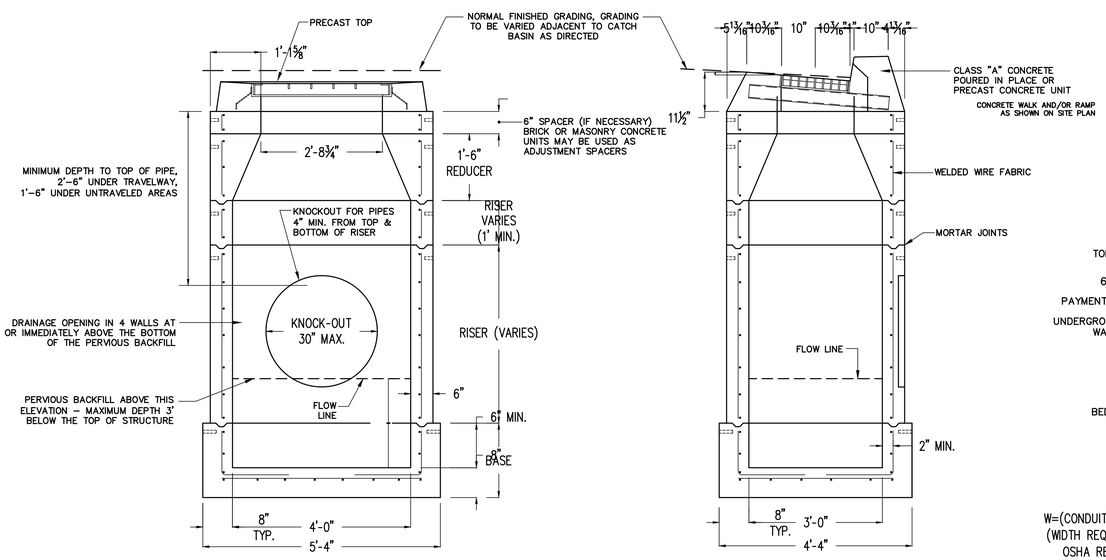

SECTION A-A

SECTION B-B

PRECAST TYPE 'C' CATCH BASIN
NOT TO SCALE

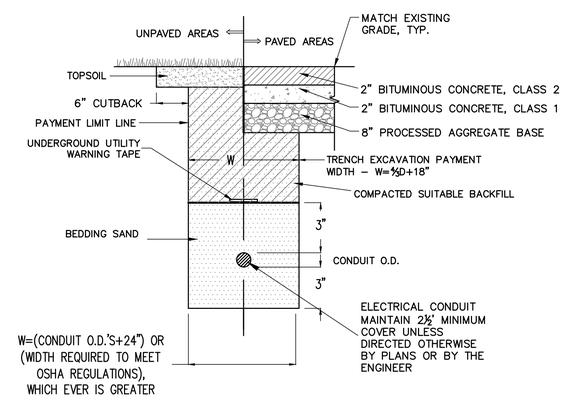

ELECTRICAL CONDUIT TRENCH
NOT TO SCALE

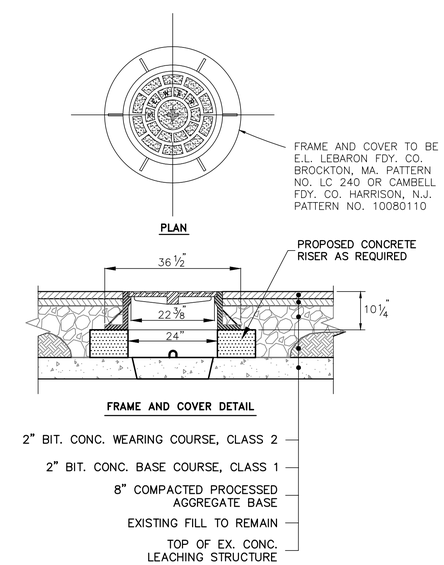

MANHOLE COVER OVER LEACHING STRUCTURE
NOT TO SCALE

Designed By: PM
Drawn By: KLD
Checked By: PM
CAD File: SITE DETAILS

Drawing Scale: AS NOTED
Drawing date: JUNE 28, 2013

Rev.	Date	Revision	By

UTILITIES DETAILS

PREPARED FOR
CIVIC CAMPUS ENHANCEMENT
TOWN OF ESSEX
ESSEX, CONNECTICUT

Lenard Engineering, Inc.
Civil, Environmental and Hydrogeological Consultants
2210 Main Street GLASTONBURY, CT (860) 659-3100
140 Willow Street WINSTED, CT (860) 379-6669
19 Midstate Drive AUBURN, MA (508) 721-7600

Drawing #: 10 of 12

Job #: 13-374

AGES 2–5

TOTAL ELEVATED PLAY COMPONENTS 11			
TOTAL ELEVATED COMPONENTS ACCESSIBLE BY RAMP	0	REQUIRED	0
TOTAL ELEVATED COMPONENTS ACCESSIBLE BY TRANSFER	11	REQUIRED	6
TOTAL ACCESSIBLE GROUND LEVEL COMPONENTS SHOWN	9	REQUIRED	4
TOTAL DIFFERENT TYPES OF GROUND LEVEL COMPONENTS	7	REQUIRED	3

AGES 5–12

TOTAL ELEVATED PLAY COMPONENTS 10			
TOTAL ELEVATED COMPONENTS ACCESSIBLE BY RAMP	0	REQUIRED	0
TOTAL ELEVATED COMPONENTS ACCESSIBLE BY TRANSFER	10	REQUIRED	5
TOTAL ACCESSIBLE GROUND LEVEL COMPONENTS SHOWN	14	REQUIRED	3
TOTAL DIFFERENT TYPES OF GROUND LEVEL COMPONENTS	7	REQUIRED	3

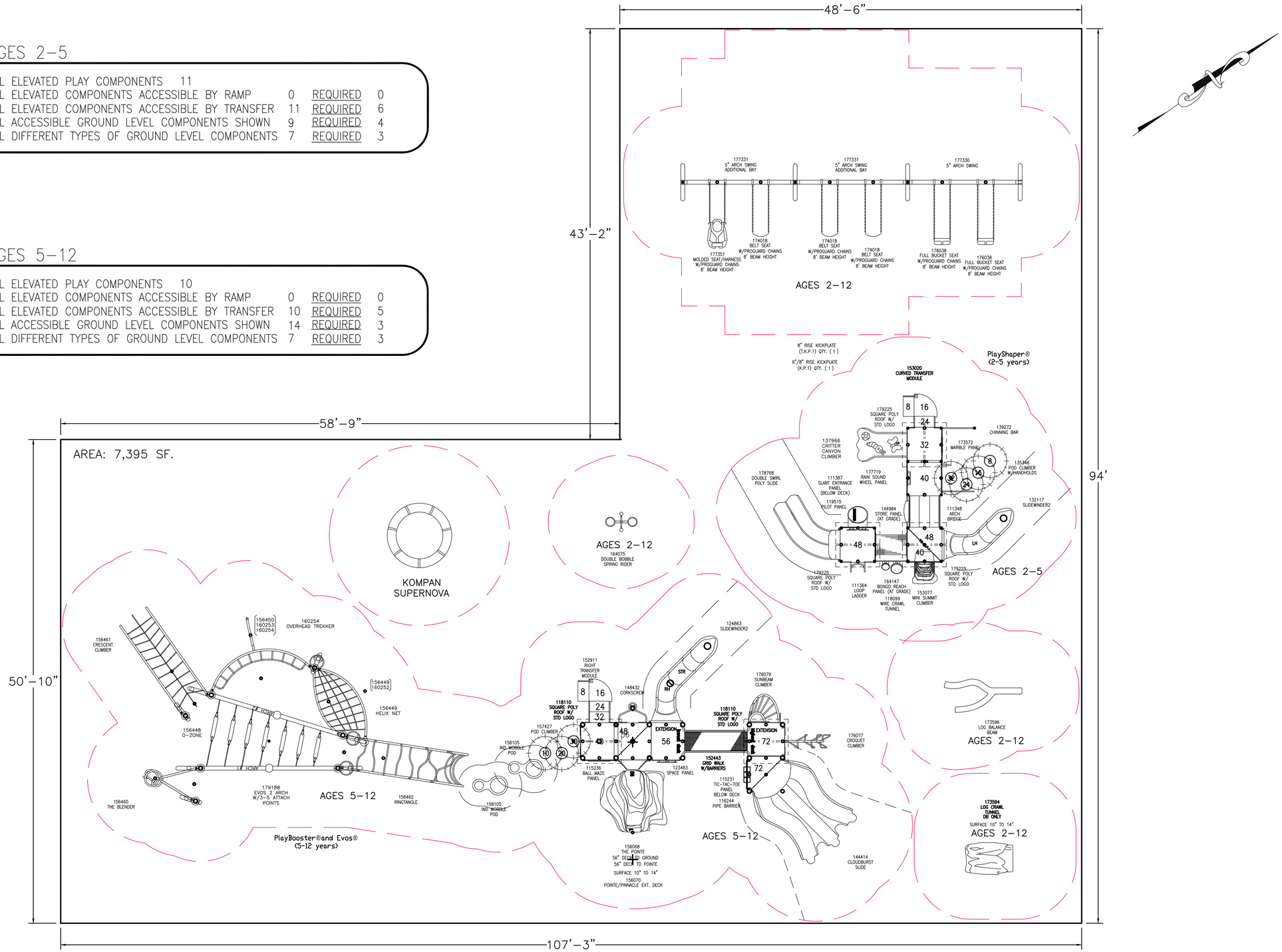

ELEMENTS FOR A GREAT OUTDOORS.
O'BRIEN & SONS
P.O. Box 650
93 West Street
Medfield, MA 02052-0650
P. 800.835.0056 F. 508.359.2817
OBRIENANDSONS.COM mail@obrienandsons.com

GROVE STREET PARK

ESSEX, CT

M.E. O'BRIEN & SONS, INC.
PETER WALLACE

SYSTEM TYPE:
PB/EVO/PS/IND

DRAWING #:
ME013347

ISO 14001:2004 CERTIFIED
ISO 9001:2000 Certified

Designed By: PM
Drawn By: KLD
Checked By: PM
CAD File: SITE DETAILS

Drawing Scale: AS NOTED
Drawing date: JUNE 28, 2013

Rev.	Date	Revision	By

PLAYSCAPE DETAILS

PREPARED FOR
CIVIC CAMPUS ENHANCEMENT
TOWN OF ESSEX
ESSEX, CONNECTICUT

Lenard Engineering, Inc.
Civil, Environmental and Hydrogeological Consultants
2210 Main Street GLASTONBURY, CT (860) 659-3100
140 Willow Street WINSTED, CT (860) 379-0659
19 Midstate Drive AUBURN, MA (508) 721-7600

Tennis Court Playing Line Layout Plan

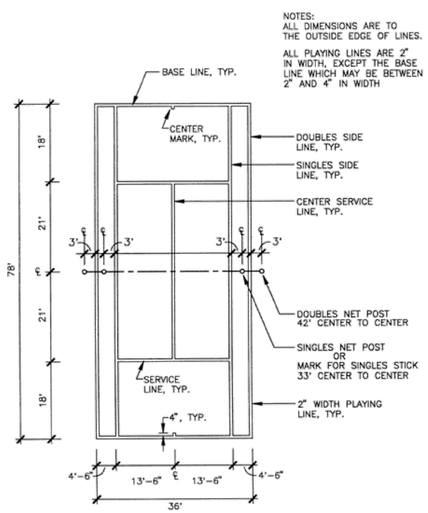

TENNIS COURT PLAYING LINE LAYOUT PLAN

NOT TO SCALE

Copyright © 1998 by U.S. Tennis Court and Track Builders Association. All Rights Reserved.

Tennis Net Center Strap Anchor

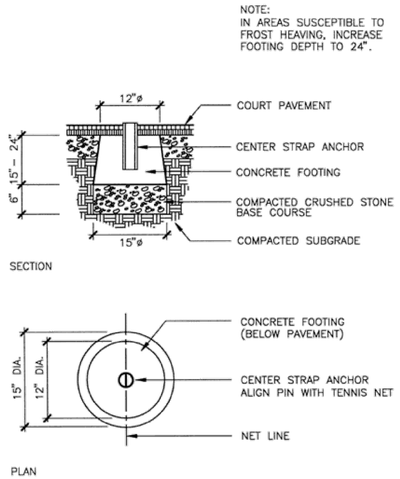

TENNIS NET CENTER STRAP ANCHOR

NOT TO SCALE

Copyright © 1998 by U.S. Tennis Court and Track Builders Association. All Rights Reserved.

Tennis Net Post Footing

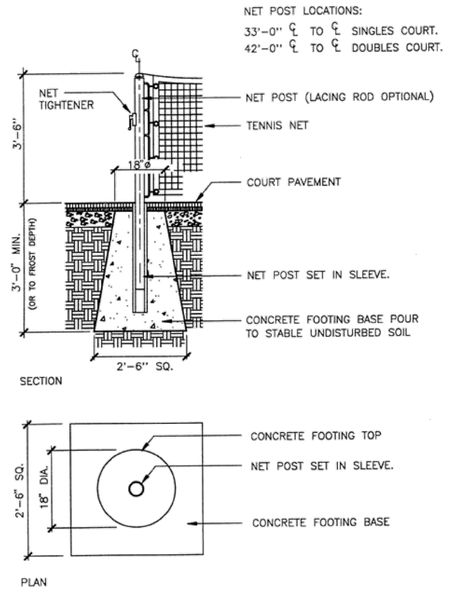

TENNIS NET POST FOOTING

NOT TO SCALE

Typical Asphalt Court Sections

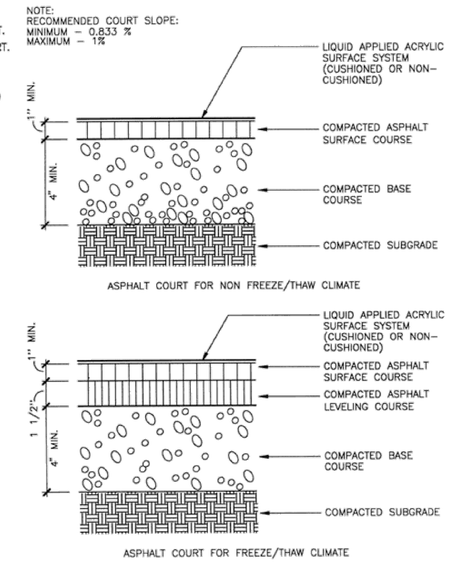

TYPICAL ASPHALT COURT SECTIONS

NOT TO SCALE

Copyright © 1998 by U.S. Tennis Court and Track Builders Association. All Rights Reserved.

Typical Tennis Net Elevations

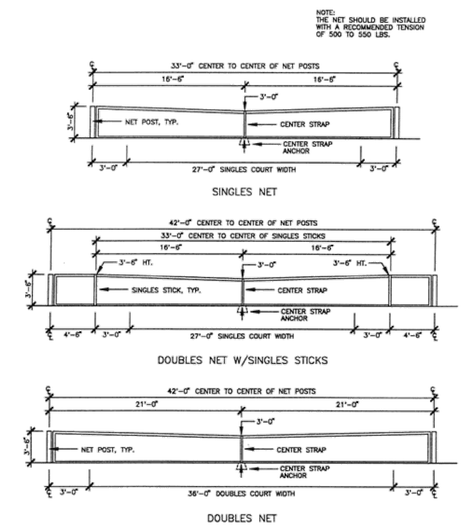

TYPICAL TENNIS NET ELEVATONS

NOT TO SCALE

Copyright © 1998 by U.S. Tennis Court and Track Builders Association. All Rights Reserved.

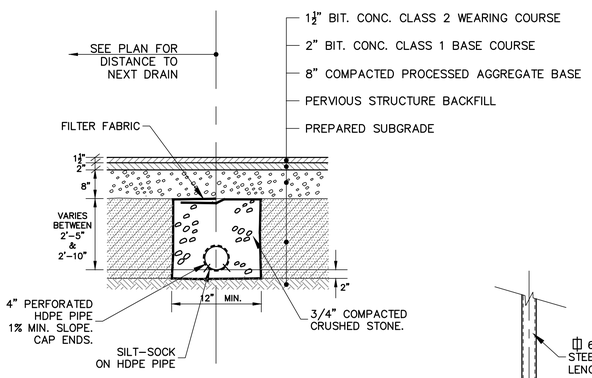

TENNIS COURT PAVEMENT AND UNDERDRAIN DETAIL

NOT TO SCALE

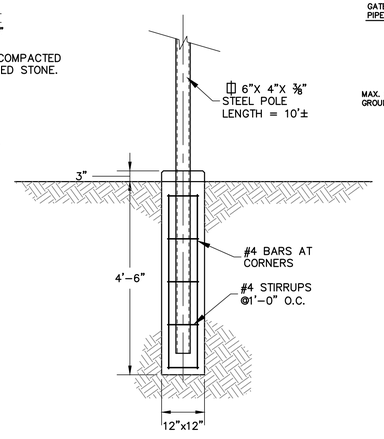

BACKBOARD POLE BASE DETAIL

NOT TO SCALE

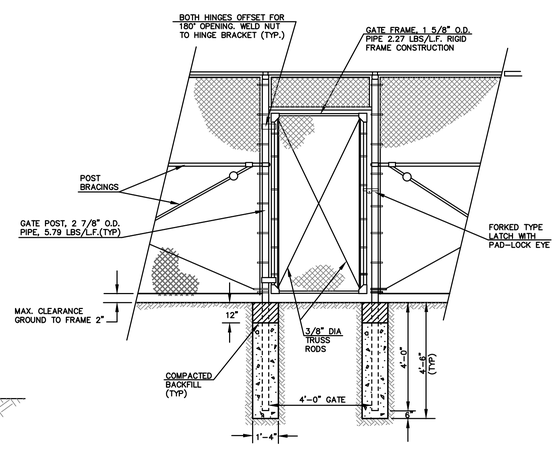

4'-0" PEDESTRIAN GATE IN CHAIN-LINK FENCE

NOT TO SCALE

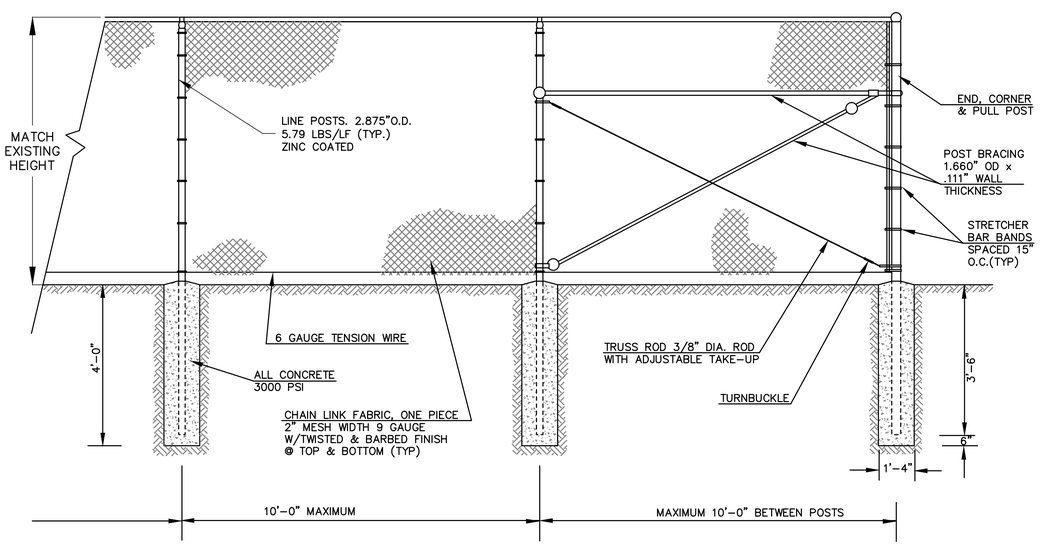

CHAIN LINK FENCE

NOT TO SCALE

Designed By: PM
Drawn By: KLD
Checked By: PM
CAD File: SITE DETAILS

Drawing Scale: AS NOTED

Drawing date: JUNE 28, 2013

Rev.	Date	Revision	By

TENNIS COURT DETAILS

PREPARED FOR
CIVIC CAMPUS ENHANCEMENT
TOWN OF ESSEX
ESSEX, CONNECTICUT

Lenard Engineering, Inc.
Civil, Environmental and Hydrogeological Consultants
19 Midstate Drive AUBURN, MA (508) 721-7000
140 Willow Street WINSTED, CT (860) 379-6669
2210 Main Street GLASTONBURY, CT (860) 659-3100

Drawing #: 12 of 12

Job #: 13-374